1. General Description

A: SPECIFICATION

1. MANUAL TRANSMISSION AND DIFFERENTIAL

Type			6-forward speeds and 1-reverse
Transmission gear ratio		1st	3.636
		2nd	2.235
		3rd	1.521
		4th	1.137
		5th	0.971
		6th	0.756
		Reverse	3.545
Front reduction gear	Final	Type of gear	Hypoid
		Gear ratio	3.900
Rear reduction gear	Transfer	Type of gear	Helical
		Gear ratio	1.100
	Final	Type of gear	Hypoid
		Gear ratio	3.545
Front differential	Type and number of gear		Planetary gear (pinion gear: 8, gear: 2)
	LSD type		Helical
Center differential	Type and number of gear		Planetary gear (Internal gear: 1, pinion gear: 6, sun gear: 1, and solenoid compression variable control multiplate clutch)
Transmission gear oil			GL-5
Transmission gear oil capacity			4.1 ℓ (4.3 US qt, 3.6 Imp qt)

2. TRANSMISSION GEAR OIL

Recommended oil:

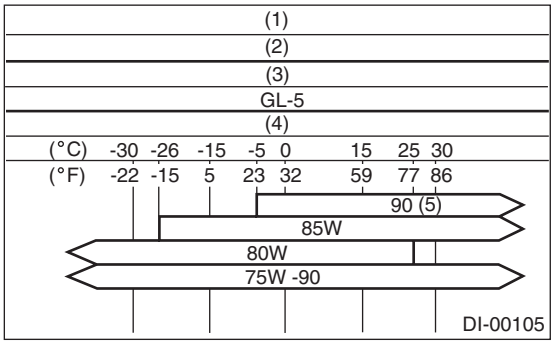

(1) Item
(2) Transmission gear oil
(3) API standard
(4) SAE viscosity No. and applicable temperature
(5) STI model

B: COMPONENT

1. CLUTCH HOUSING

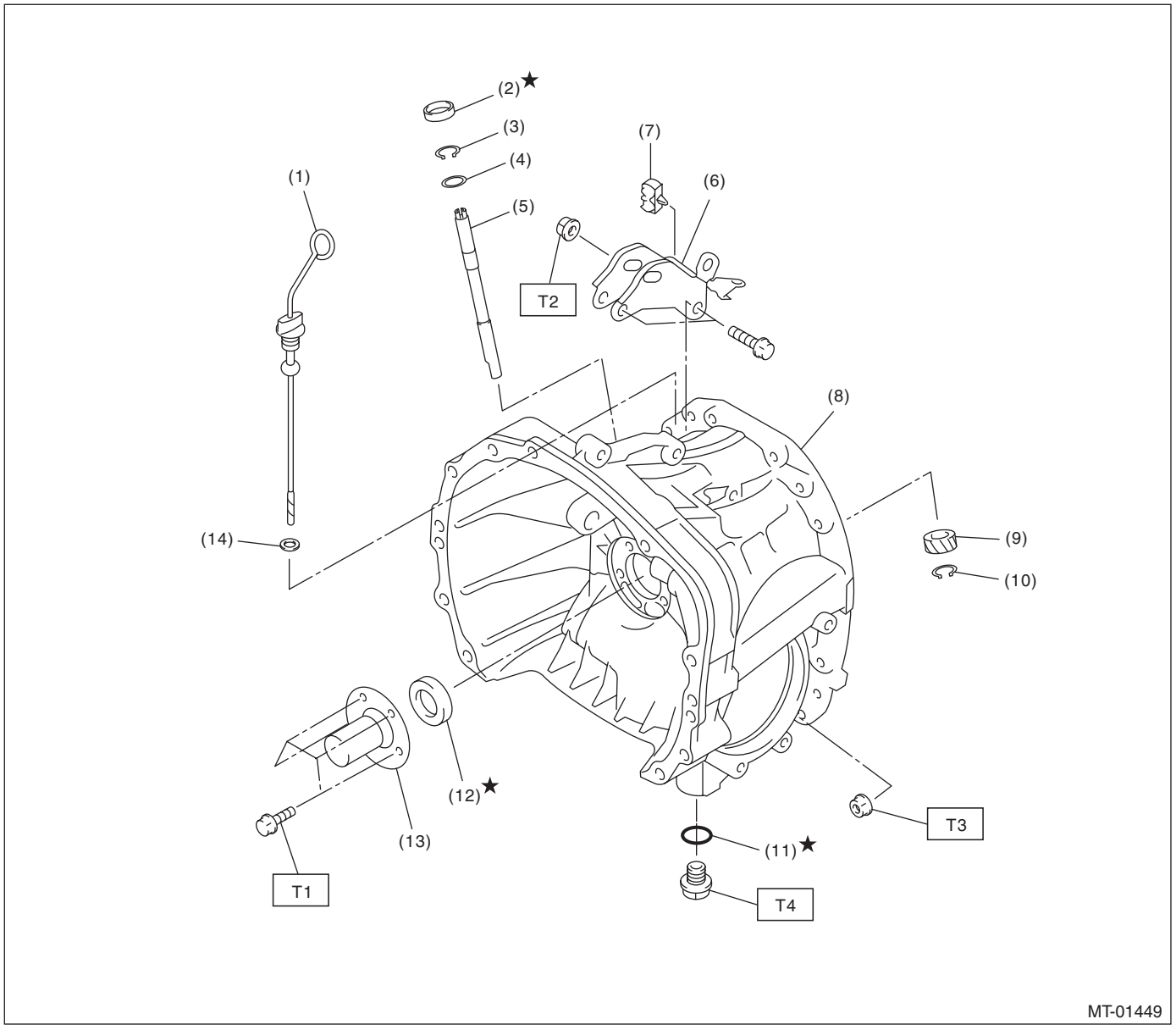

(1)	Oil level gauge	(8)	Clutch housing
(2)	Oil seal	(9)	Speedometer driven gear
(3)	Snap ring	(10)	Snap ring
(4)	Washer	(11)	Gasket
(5)	Speedometer driven gear shaft	(12)	Oil seal
(6)	Pitching stopper bracket	(13)	Clutch release bearing guide
(7)	Clip	(14)	O-ring

Tightening torque:N·m (kgf-m, ft-lb)

T1: 6.4 (0.65, 4.7)
T2: 41 (4.2, 30.2)
T3: 50 (5.1, 36.9)
T4: 70 (7.1, 51.6)

2. ADAPTER PLATE

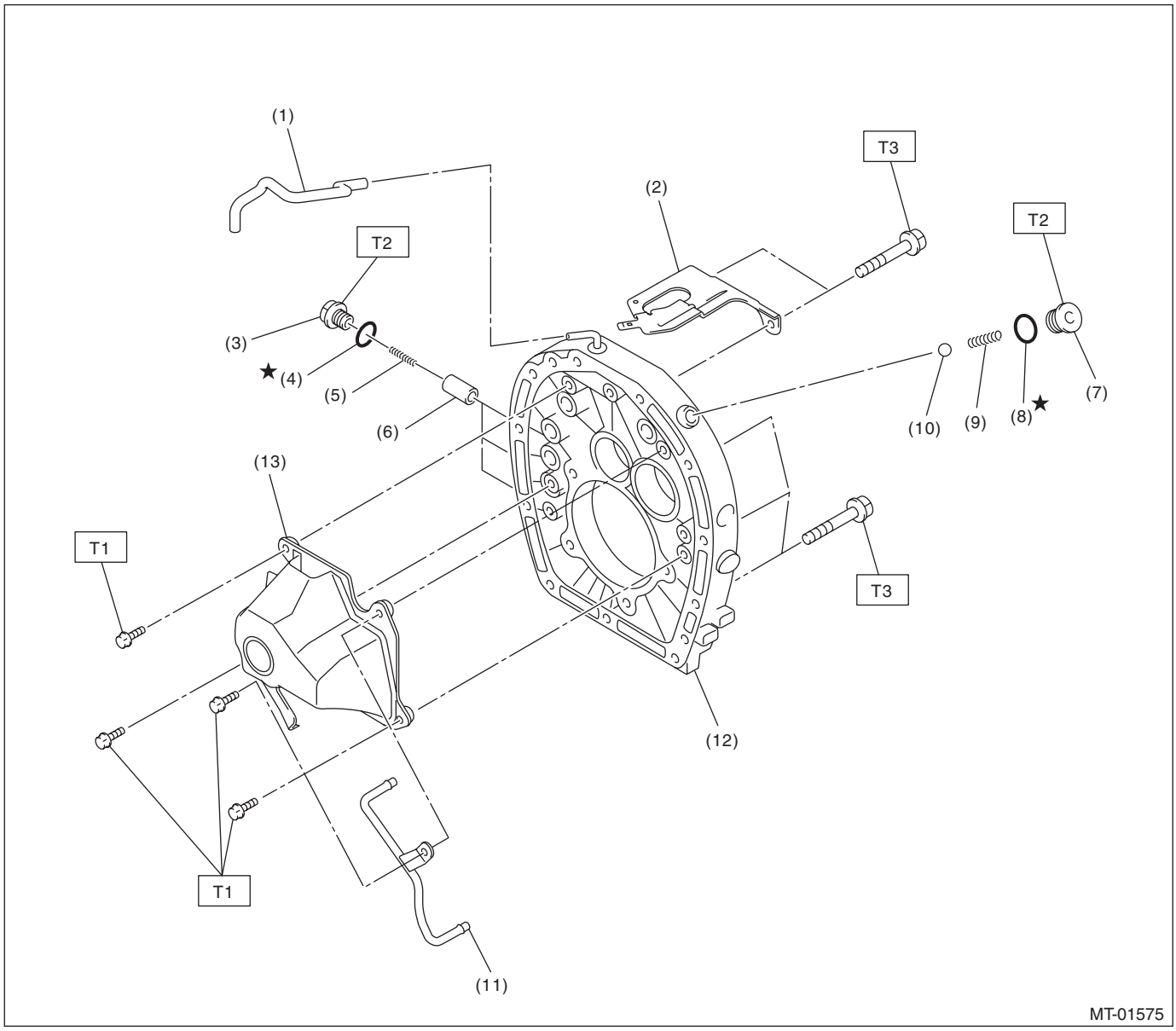

(1)	Air breather hose	(7)	Plug	(13)	Oil chamber
(2)	Transmission harness stay	(8)	O-ring		
(3)	Plug	(9)	Spring		
(4)	O-ring	(10)	Ball		
(5)	Spring	(11)	Lubrication pipe		
(6)	Plunger	(12)	Adapter plate		

Tightening torque:N·m (kgf-m, ft-lb)
T1: 6.4 (0.65, 4.7)
T2: 25 (2.5, 18.4)
T3: 50 (5.1, 36.9)

3. TRANSMISSION CASE

- **Transmission serial No. 144576 or earlier**

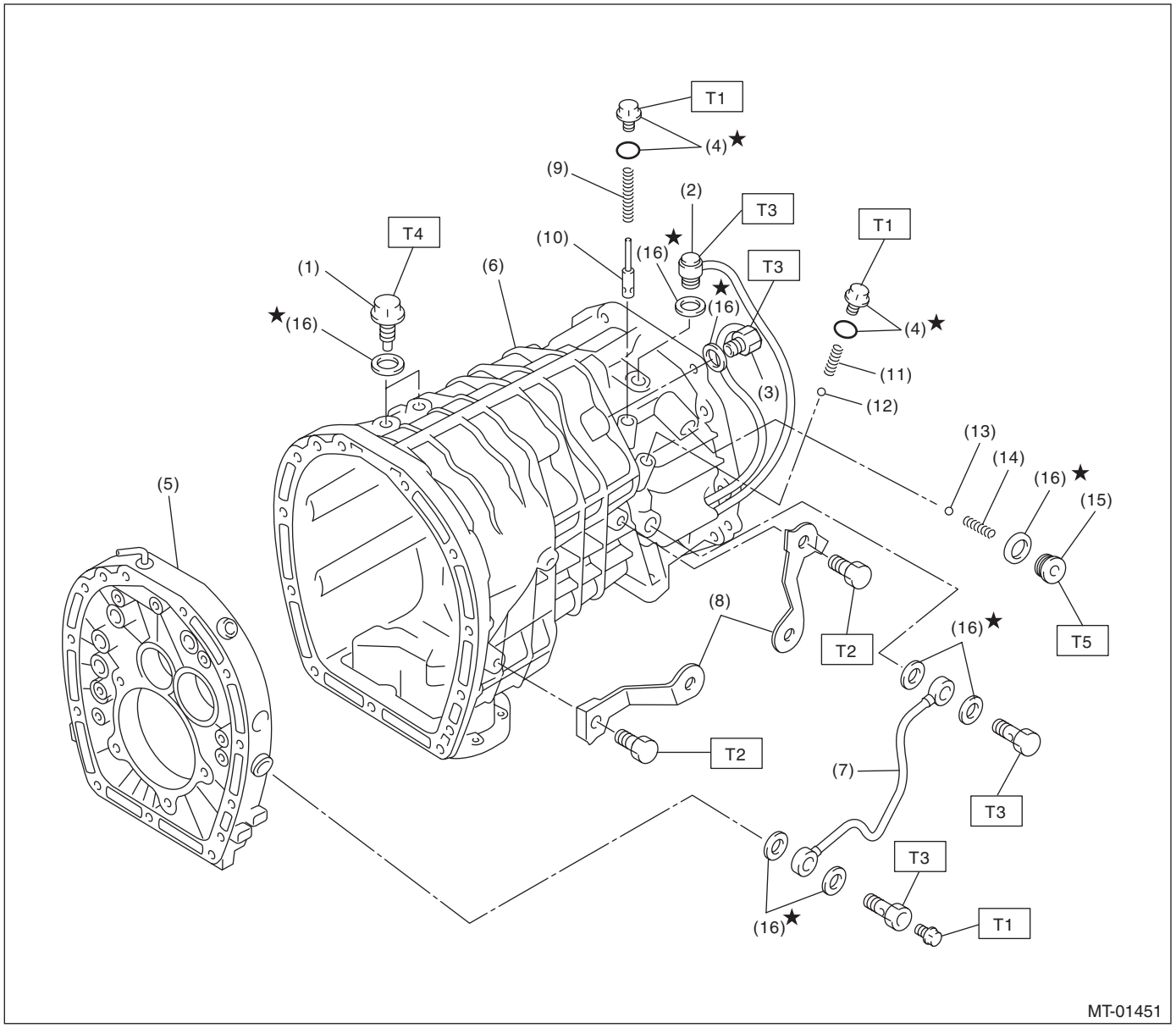

(1)	Pilot bolt	(9)	Return spring
(2)	Neutral position switch	(10)	Pressure relief valve
(3)	Back-up light switch	(11)	Return spring
(4)	O-ring	(12)	Ball
(5)	Adapter plate	(13)	Ball
(6)	Transmission case	(14)	Spring
(7)	Oil pipe	(15)	Plug
(8)	Harness bracket	(16)	Gasket

Tightening torque:N·m (kgf-m, ft-lb)	
T1:	***13 (1.3, 9.6)***
T2:	***16 (1.6, 11.8)***
T3:	***32 (3.3, 23.6)***
T4:	***34 (3.5, 25.1)***
T5:	***41 (4.2, 30.2)***

- **Transmission serial No. 144577 or later**

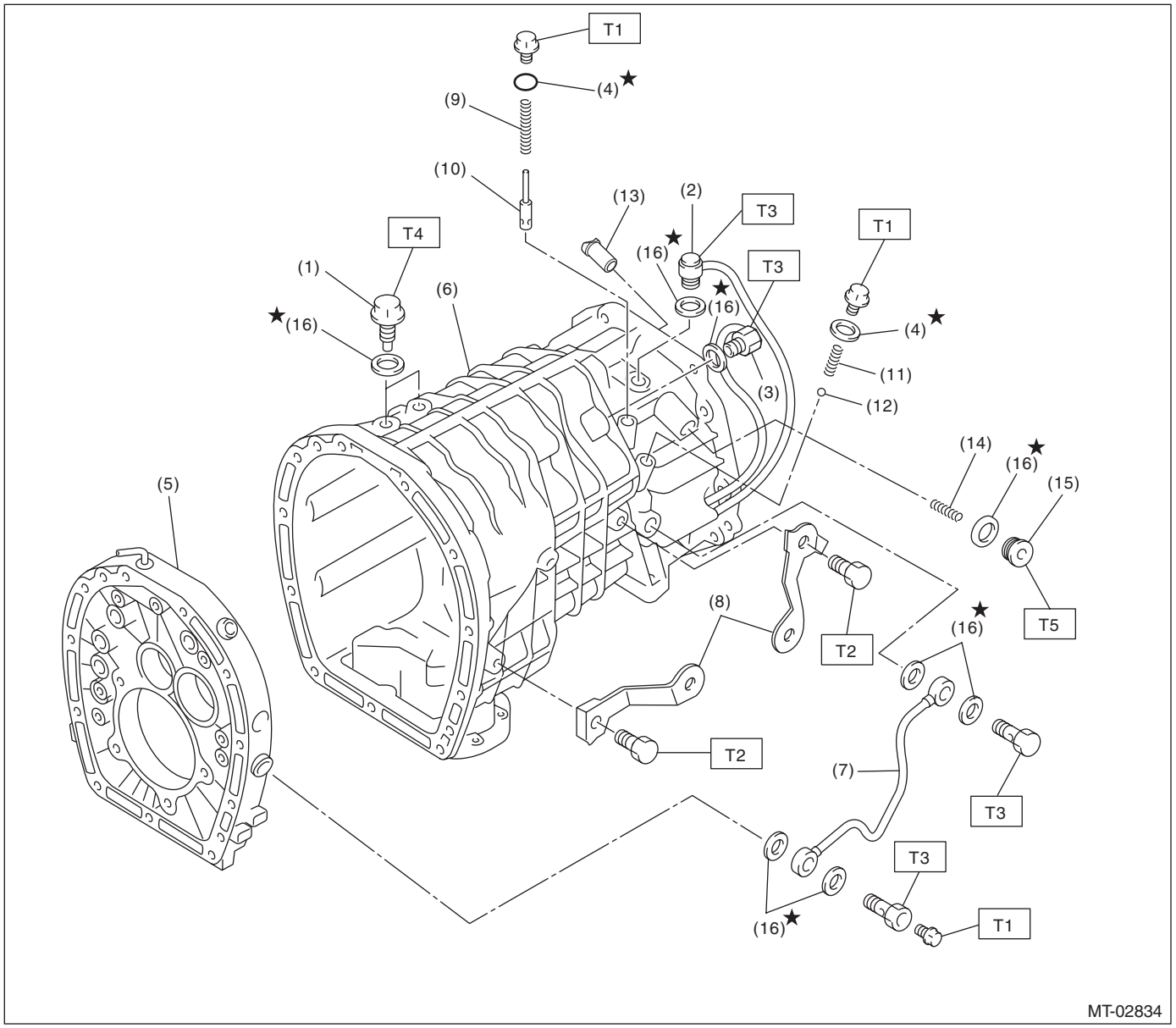

(1)	Pilot bolt	(9)	Return spring
(2)	Neutral position switch	(10)	Pressure relief valve
(3)	Back-up light switch	(11)	Return spring
(4)	O-ring	(12)	Ball
(5)	Adapter plate	(13)	Selector plunger
(6)	Transmission case	(14)	Spring
(7)	Oil pipe	(15)	Plug
(8)	Harness bracket	(16)	Gasket

Tightening torque:N·m (kgf-m, ft-lb)	
T1:	*13 (1.3, 9.6)*
T2:	*16 (1.6, 11.8)*
T3:	*32 (3.3, 23.6)*
T4:	*34 (3.5, 25.1)*
T5:	*41 (4.2, 30.2)*

4. OIL PAN AND OIL PUMP

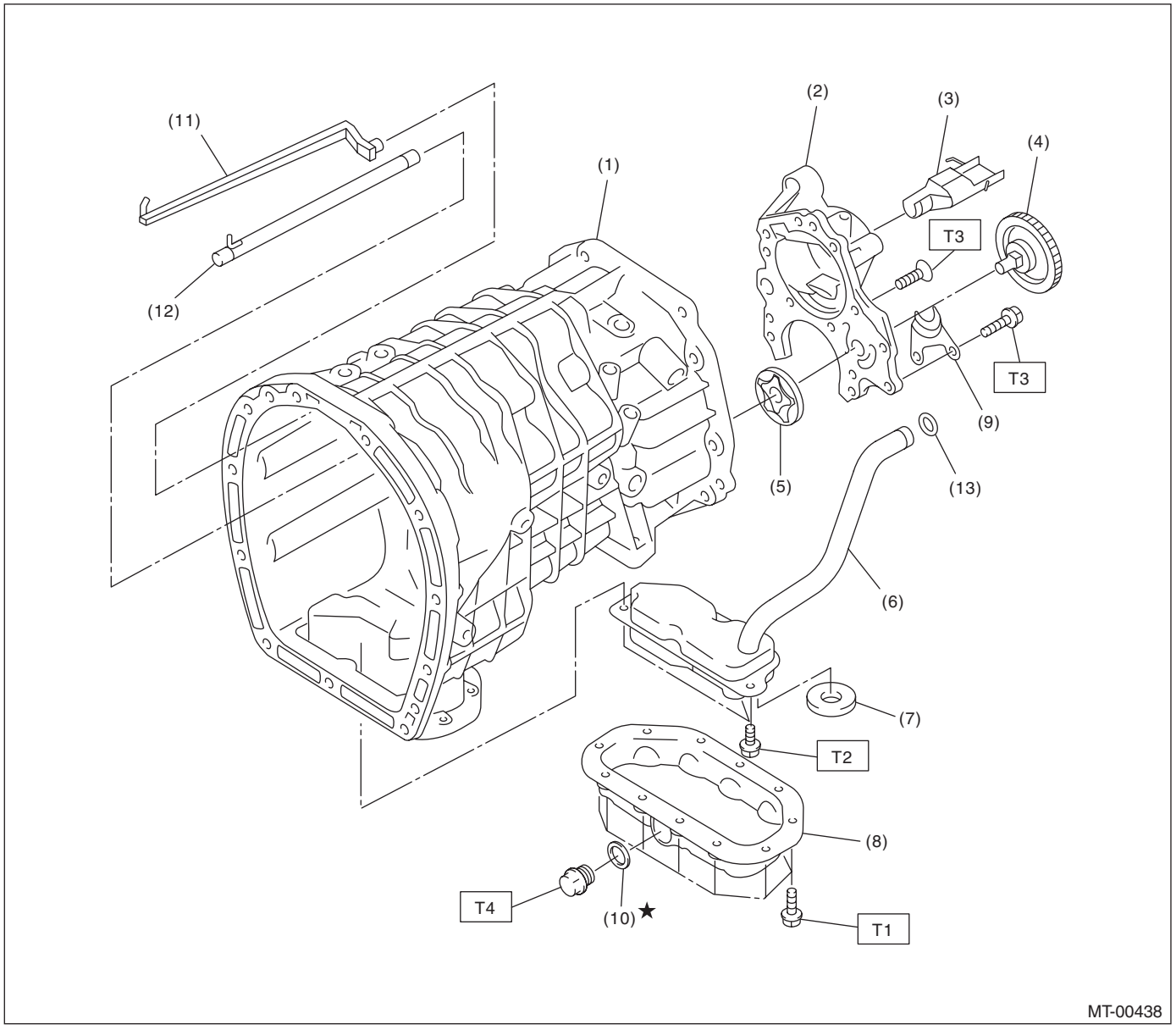

(1)	Transmission case	(8)	Oil pan
(2)	Oil pump cover	(9)	Plate
(3)	Oil guide	(10)	Gasket
(4)	Oil pump driven gear ASSY	(11)	Oil guide
(5)	Oil pump rotor ASSY	(12)	Oil pipe
(6)	Strainer ASSY	(13)	O-ring
(7)	Magnet		

Tightening torque:N·m (kgf-m, ft-lb)

T1: 6.4 (0.65, 4.7)
T2: 10 (1.0, 7.4)
T3: 25 (2.5, 18.1)
T4: 44 (4.5, 32.5)

5. EXTENSION CASE AND CENTER DIFFERENTIAL

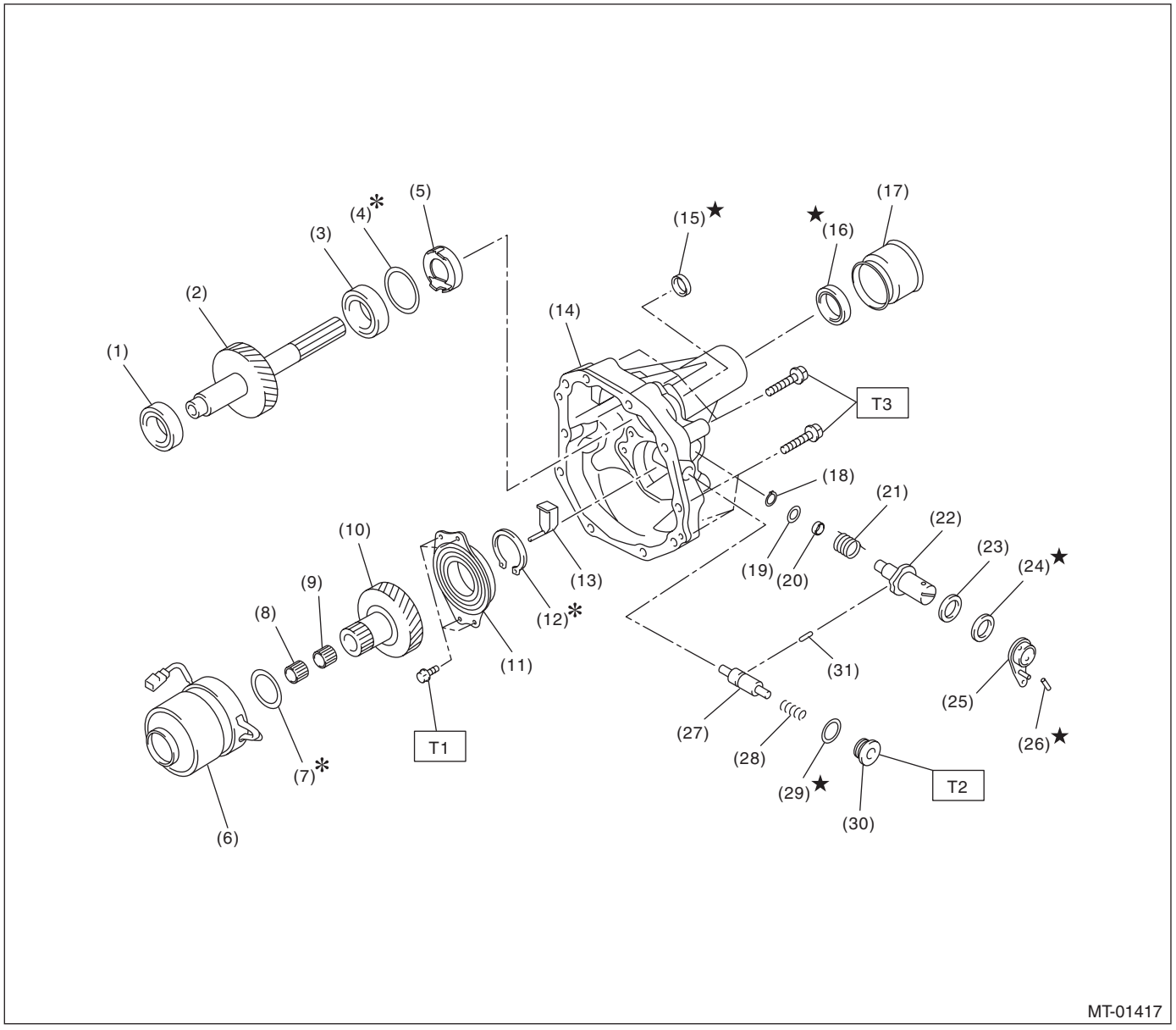

(1)	Taper roller bearing	(13)	Extension guide	(25)	Reverse check lever COMPL
(2)	Transfer driven gear	(14)	Extension case	(26)	Straight pin
(3)	Taper roller bearing	(15)	Oil seal	(27)	Reverse check plug
(4)	Shim	(16)	Oil seal	(28)	Spring
(5)	Oil plate	(17)	Dust cover	(29)	Gasket
(6)	Center differential	(18)	Snap ring	(30)	Plug
(7)	Shim	(19)	Washer	(31)	Plunger
(8)	Needle bearing	(20)	Bushing		
(9)	Needle bearing	(21)	Spring		
(10)	Transfer drive gear	(22)	Reverse check shaft		
(11)	Ball bearing (with flange)	(23)	Ball bearing		
(12)	Snap ring	(24)	Oil seal		

Tightening torque:N·m (kgf-m, ft-lb)

T1: 25 (2.5, 18.1)
T2: 41 (4.2, 30.2)
T3: 48 (4.9, 35.4)

6. SHIFTER FORK AND FORK ROD

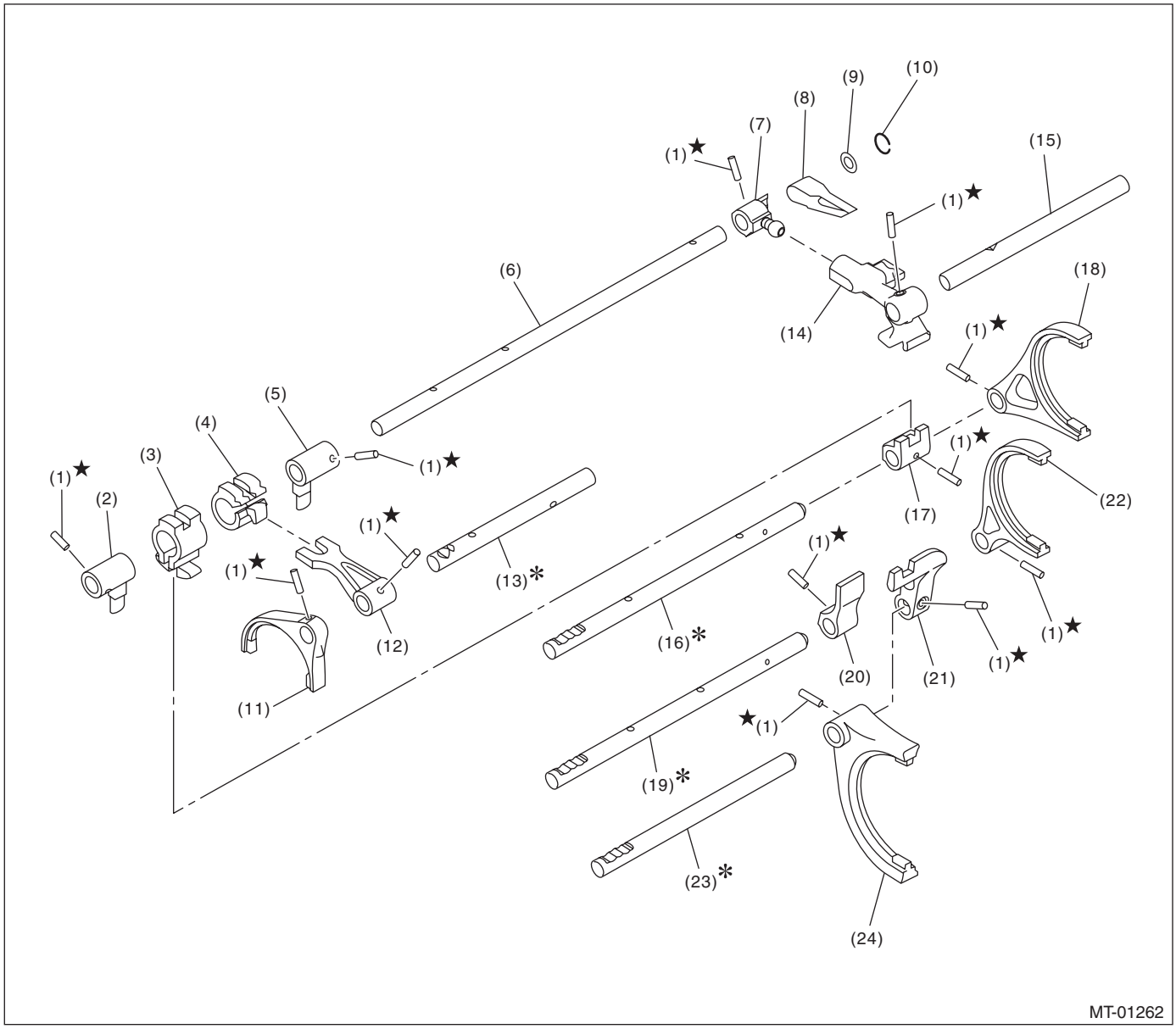

(1)	Spring pin	(9)	Washer	(17)	5th-6th shifter arm
(2)	Interlock arm	(10)	Snap ring	(18)	5th-6th fork COMPL
(3)	Interlock block	(11)	Reverse fork COMPL	(19)	3rd-4th fork rod
(4)	Reverse interlock block	(12)	Reverse shifter arm	(20)	3rd-4th shifter arm
(5)	Interlock arm	(13)	Reverse fork rod	(21)	1st-2nd shifter arm
(6)	Striking rod	(14)	Selector arm	(22)	3rd-4th fork COMPL
(7)	Selector arm No. 2	(15)	Shifter arm shaft	(23)	1st-2nd fork rod
(8)	Neutral set spring	(16)	5th-6th fork rod	(24)	1st-2nd fork COMPL

7. MAIN SHAFT ASSEMBLY

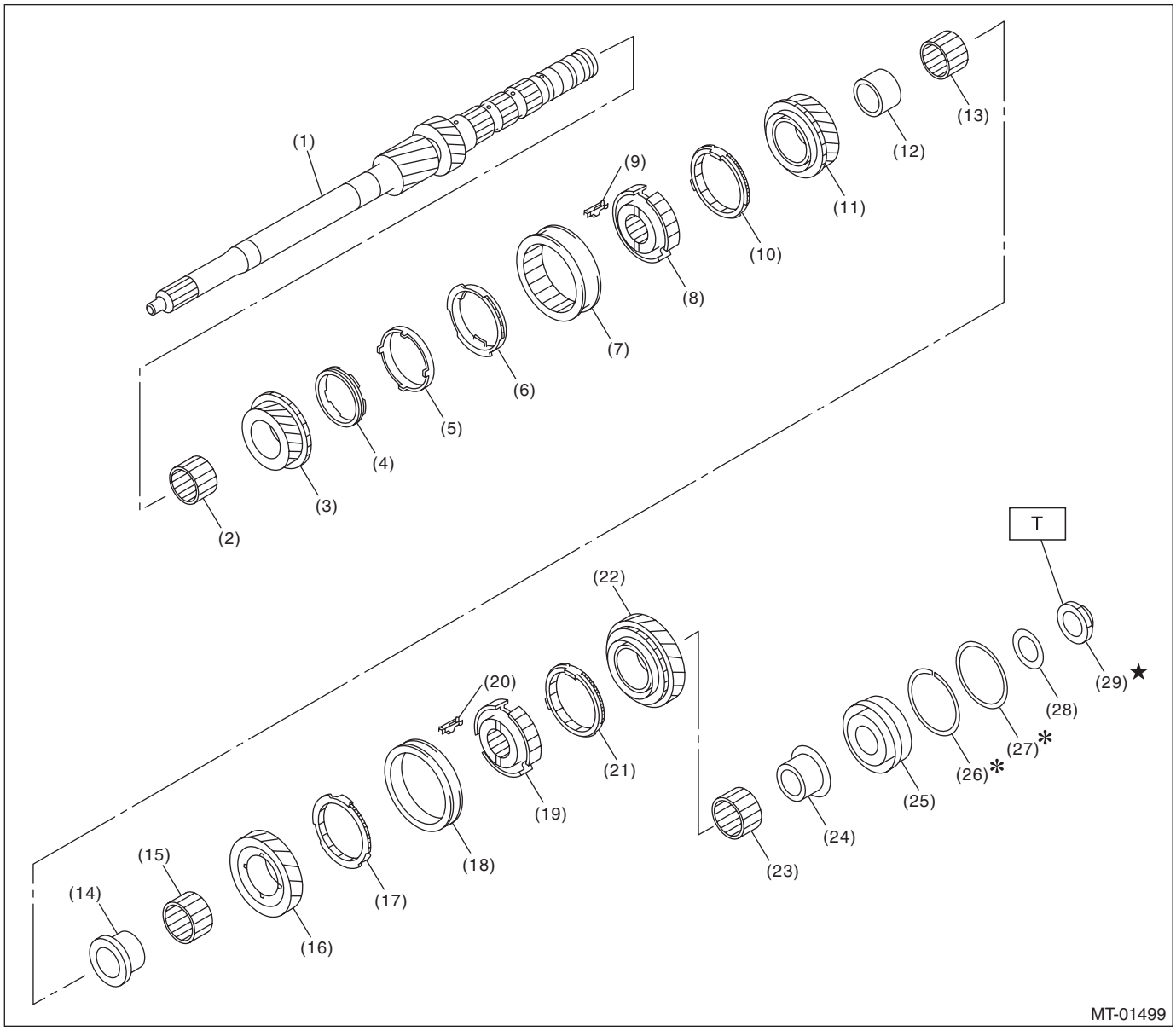

(1)	Main shaft	(12)	4th bushing	(23)	Needle bearing
(2)	Needle bearing	(13)	Needle bearing	(24)	6th bushing
(3)	3rd drive gear	(14)	5th bushing	(25)	Taper roller bearing
(4)	Inner baulk ring	(15)	Needle bearing	(26)	Snap ring
(5)	Synchro cone	(16)	5th drive gear	(27)	Washer
(6)	Outer baulk ring	(17)	5th baulk ring	(28)	Washer
(7)	3rd-4th sleeve	(18)	5th-6th sleeve	(29)	Lock nut
(8)	3rd-4th hub	(19)	5th-6th hub		
(9)	Shifting insert key	(20)	Shifting insert key		
(10)	4th baulk ring	(21)	6th baulk ring		
(11)	4th gear	(22)	6th drive gear		

Tightening torque:N·m (kgf-m, ft-lb)
T: 392 (40.0, 289)

8. DRIVE PINION AND DRIVE SHAFT ASSEMBLY

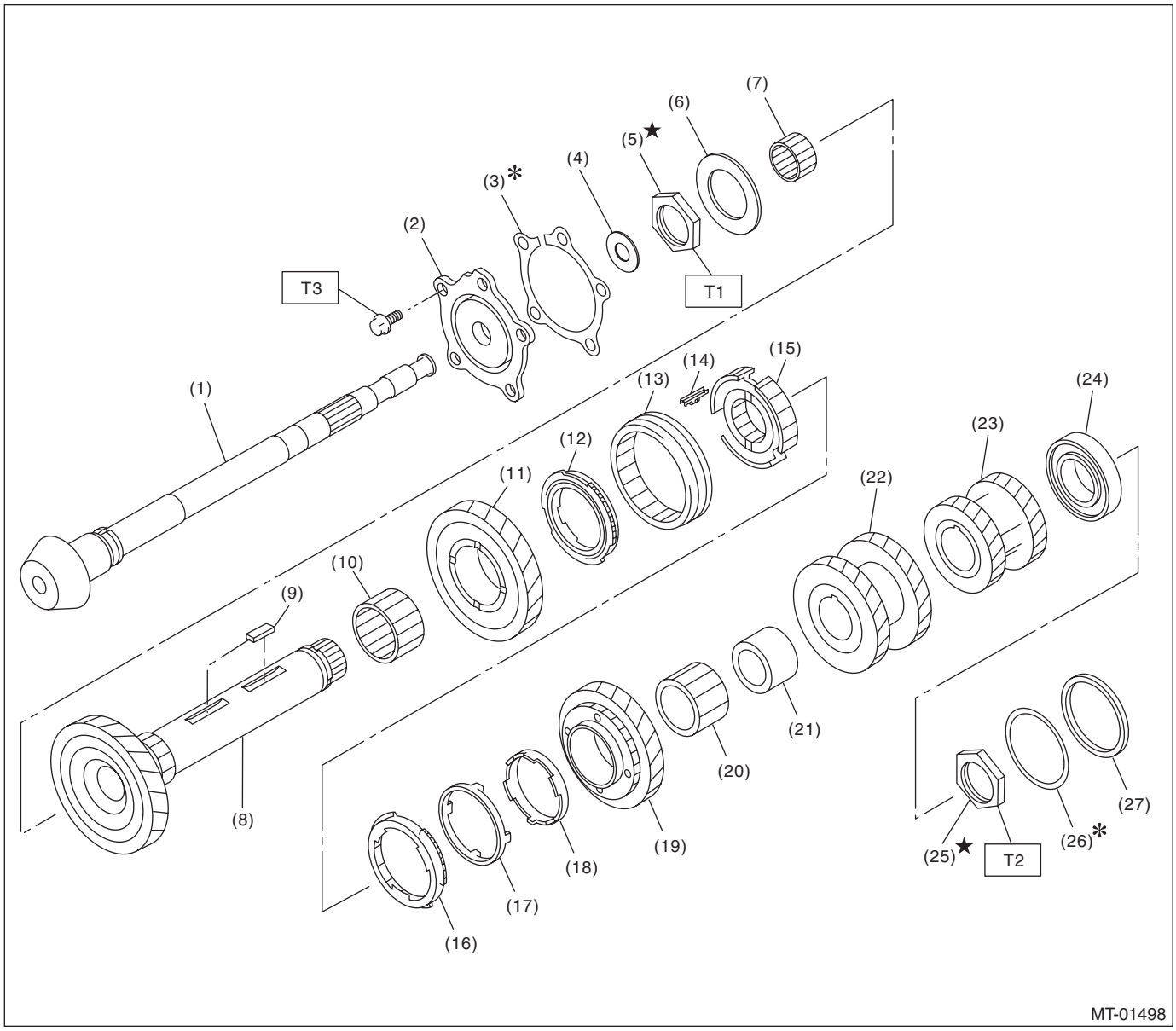

(1)	Drive pinion shaft	(13)	1st-2nd sleeve	(25)	Lock nut
(2)	Taper roller bearing	(14)	Shifting insert key	(26)	Shim
(3)	Shim	(15)	1st-2nd hub	(27)	Collar
(4)	Washer	(16)	Outer baulk ring		
(5)	Lock nut	(17)	Synchro cone		
(6)	Thrust bearing	(18)	Inner baulk ring		
(7)	Needle bearing	(19)	2nd driven gear		
(8)	Driven shaft	(20)	Needle bearing		
(9)	Key	(21)	2nd bushing		
(10)	Needle bearing	(22)	3rd-4th driven gear		
(11)	1st driven gear	(23)	5th-6th driven gear		
(12)	1st synchro ring ASSY	(24)	Ball bearing		

Tightening torque:N·m (kgf-m, ft-lb)

T1: 285 (29.1, 210)
**** 265 (27.0, 195)***

T2: 570 (58.1, 420)
**** 530 (54.0, 391)***

T3: 54 (5.5, 39.8)

* Tightening torque when using the ST

9. REVERSE IDLER GEAR ASSEMBLY

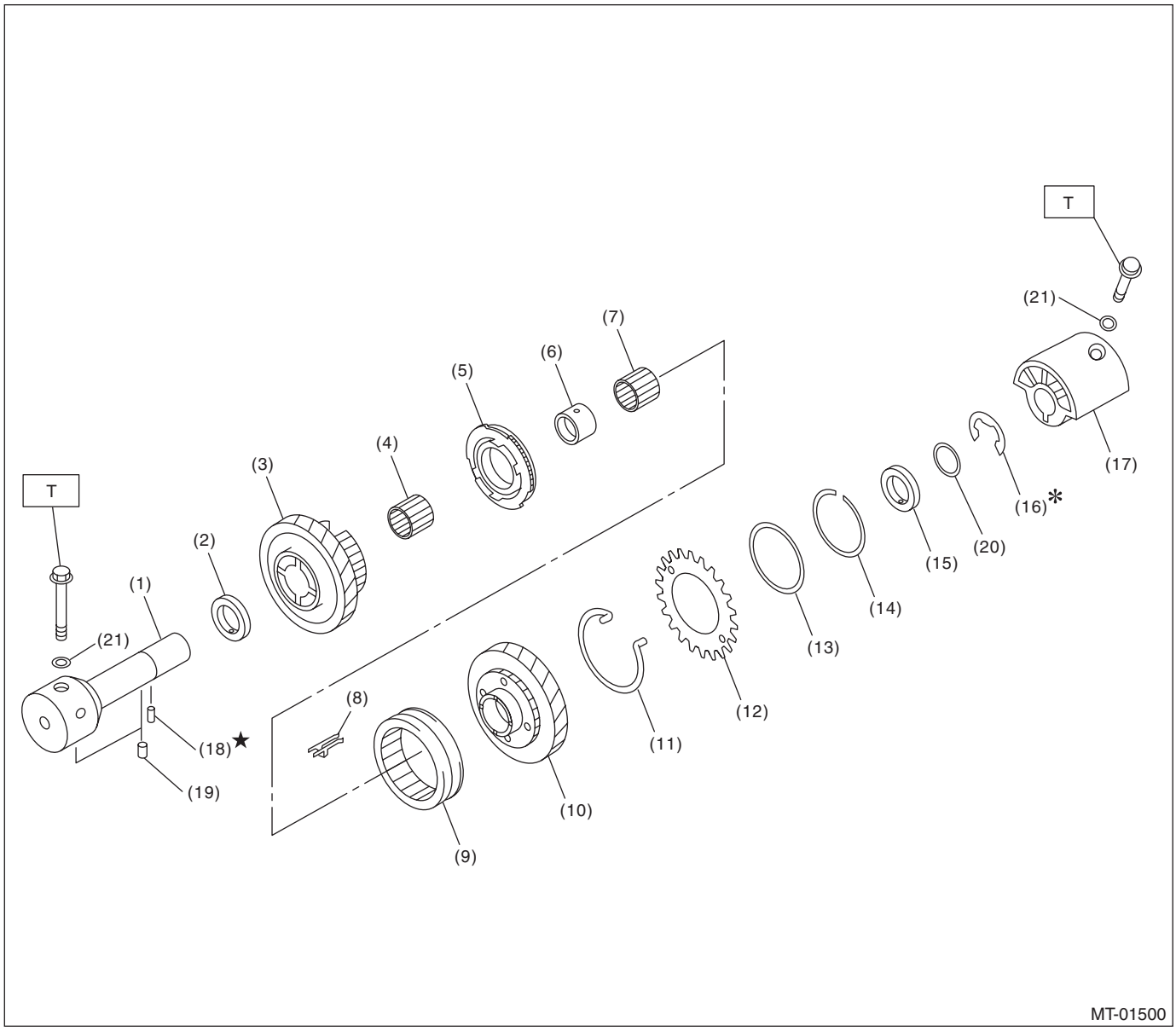

(1)	Base	(9)	Reverse coupling sleeve	(17)	Reverse idler holder
(2)	Washer	(10)	Reverse idler gear	(18)	Spring pin
(3)	Reverse idler gear No. 2	(11)	Spring	(19)	Knock pin
(4)	Needle bearing	(12)	Sub gear	(20)	Washer
(5)	Reverse idler synchro set	(13)	Friction plate	(21)	Gasket
(6)	Reverse idler gear bushing	(14)	Snap ring		
(7)	Needle bearing	(15)	Washer		
(8)	Shifting insert key	(16)	Snap ring		

Tightening torque:N·m (kgf-m, ft-lb)
T: 25 (2.5, 18.1)

10.FRONT DIFFERENTIAL

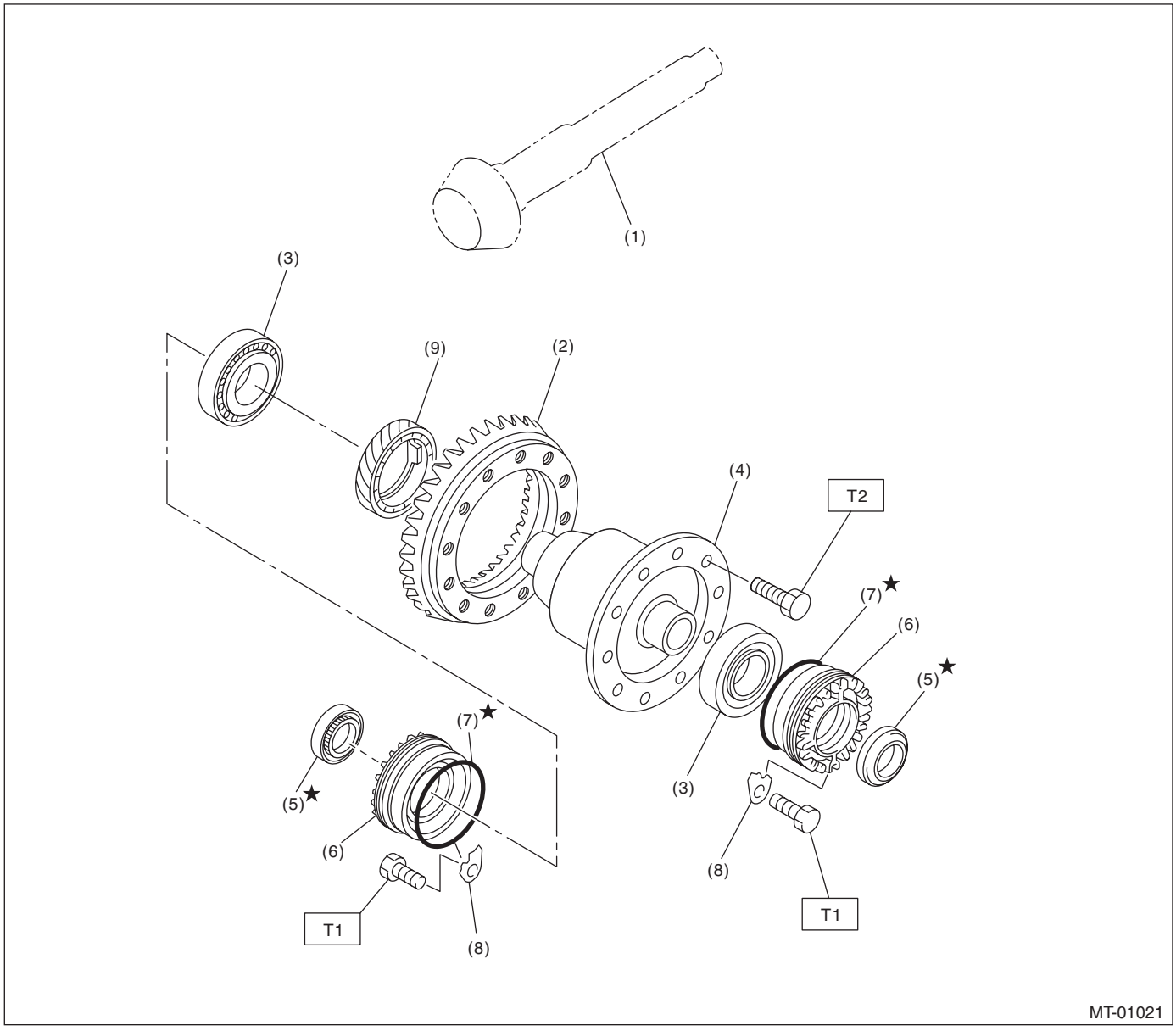

(1) Drive pinion shaft
(2) Hypoid driven gear
(3) Roller bearing
(4) Differential ASSY
(5) Oil seal
(6) Differential side retainer
(7) O-ring
(8) Retainer lock plate
(9) Speedometer drive gear

Tightening torque:N·m (kgf-m, ft-lb)
T1: 25 (2.5, 18.1)
T2: 69 (7.0, 50.9)

11.TRANSMISSION MOUNTING

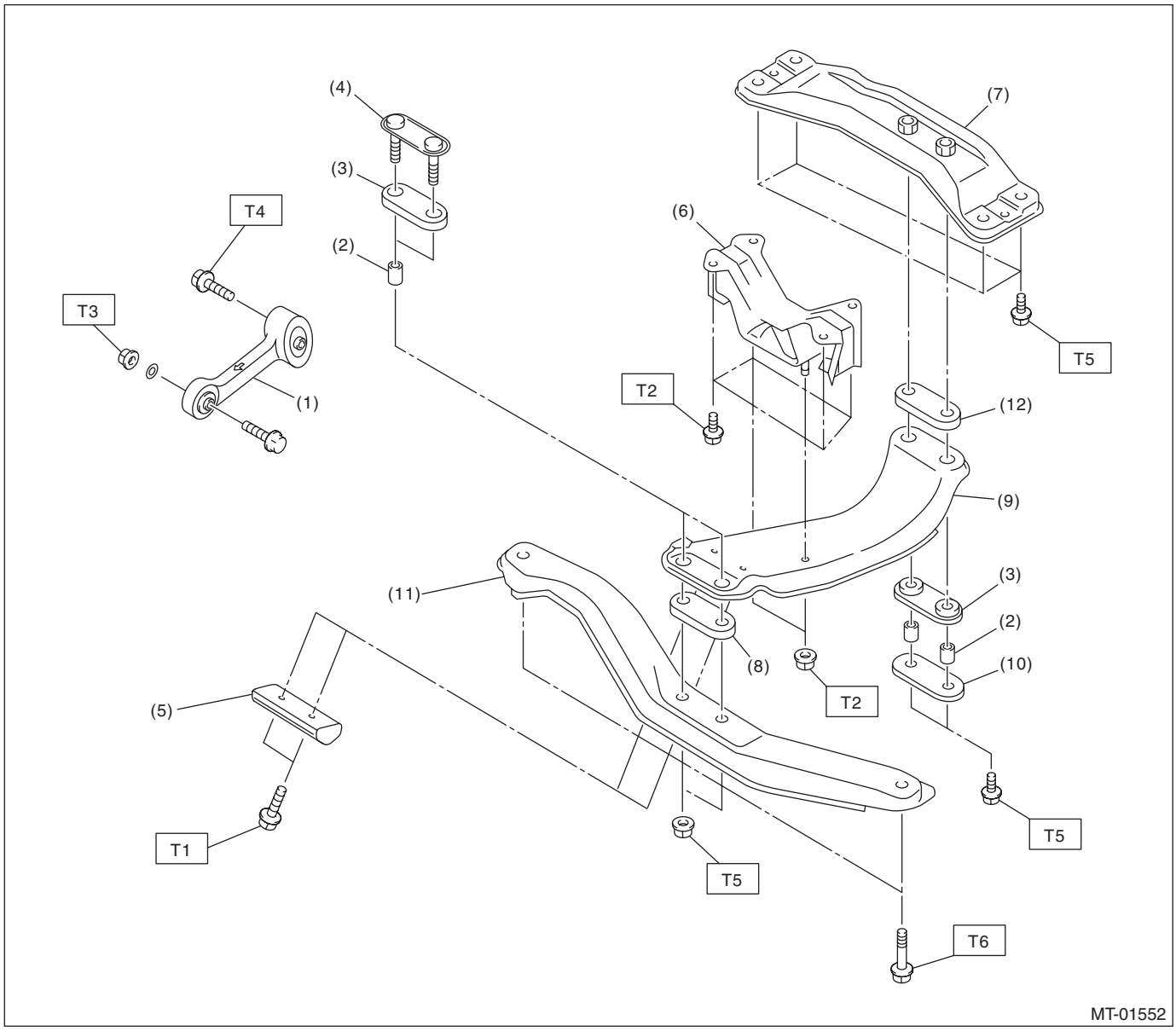

(1)	Pitching stopper	(8)	Upper cushion rubber	***Tightening torque:N·m (kgf-m, ft-lb)***
(2)	Spacer	(9)	Center crossmember	***T1: 7.5 (0.76, 5.5)***
(3)	Lower cushion rubber	(10)	Rear plate	***T2: 35 (3.6, 25.8)***
(4)	Front plate	(11)	Front crossmember	***T3: 50 (5.1, 36.9)***
(5)	Dynamic damper	(12)	Rear cushion rubber	***T4: 58 (5.9, 42.8)***
(6)	Transmission cushion rubber			***T5: 70 (7.1, 51.6)***
(7)	Rear crossmember			***T6: 140 (14.3, 103)***

C: CAUTION

- Wear appropriate work clothing, including a cap, protective goggles and protective shoes when performing any work.
- Remove contamination including dirt and corrosion before removal, installation or disassembly.
- Keep the disassembled parts in order and protect them from dust and dirt.
- Before removal, installation or disassembly, be sure to clarify the abnormal condition. Avoid unnecessary removal, installation, disassembly and replacement.
- When disassembling the case and other light alloy parts, open the cases by using a plastic hammer. Do not pry apart with screwdrivers or other tools.
- Vehicle components are extremely hot after driving. Be wary of receiving burns from heated parts.
- Use SUBARU genuine gear oil, grease or the equivalent. Do not mix fluid, grease, etc. of different grades or manufacturers.
- Be sure to tighten fasteners including bolts and nuts to the specified torque.
- Place shop jacks or rigid racks at the specified points.
- Apply gear oil onto sliding or revolving surfaces before installation.
- Always replace deformed or damaged snap rings.
- Before installing O-rings or oil seals, apply sufficient amount of gear oil to avoid damage and deformation.
- Be careful not to incorrectly install or fail to install O-rings, snap rings and other parts.
- Before securing a part on a vise, place cushioning material such as wood blocks, aluminum plate, or cloth between the part and the vise.
- Avoid damaging the mating surface of the case.
- Before applying liquid gasket, completely remove the old gasket.

D: PREPARATION TOOL

1. SPECIAL TOOL

ILLUSTRATION	TOOL NUMBER	DESCRIPTION	REMARKS
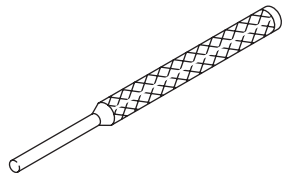 ST-398791700	398791700	REMOVER	Used for removing and installing the spring pin (6 mm).
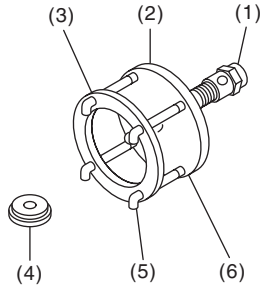 ST-399527700	399527700	PULLER SET	Used for removing and installing the roller bearing (Differential). (1) Bolt (2) Puller (3) Holder (4) Adapter (5) Bolt (6) Nut
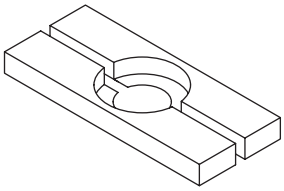 ST-498515700	498515700	REMOVER	Used for removing the roller bearing of the drive pinion shaft.
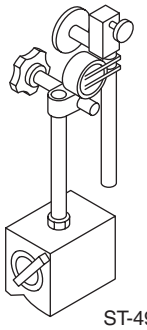 ST-498247001	498247001	MAGNET BASE	• Used for measuring backlash between the side gear, pinion, and hypoid gear. • Used together with the DIAL GAUGE (498247100).

ILLUSTRATION	TOOL NUMBER	DESCRIPTION	REMARKS
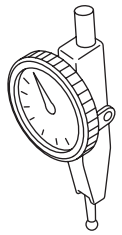 ST-498247100	498247100	DIAL GAUGE	• Used for measuring backlash between the side gear, pinion, and hypoid gear. • Used together with the MAGNET BASE (498247001).
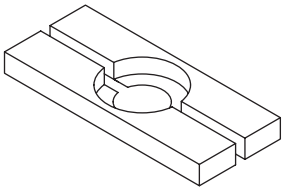 ST-498077000	498077000	REMOVER	Used for removing the differential taper roller bearing.
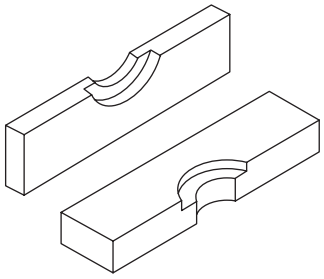 ST-899858600	899858600	REMOVER	Used for removing the roller bearing.
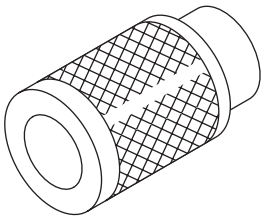 ST-499757002	499757002	INSTALLER	Used for installing the bearing cone of the transfer driven gear (extension core side).
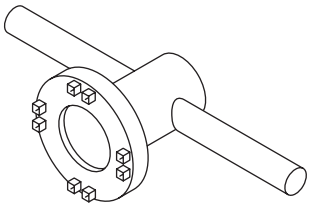 ST-499787000	499787000	WRENCH ASSY	Used for removing and installing the differential side retainer RH.

ILLUSTRATION	TOOL NUMBER	DESCRIPTION	REMARKS
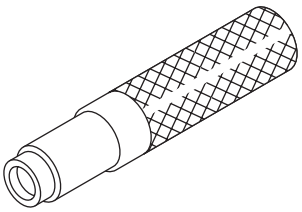 ST-499827000	499827000	PRESS	Used for installing the speedometer oil seal when attaching the speedometer cable to the transmission.
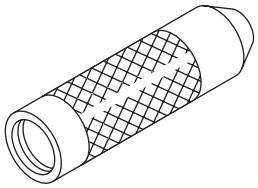 ST-499877000	499877000	RACE 4-5 INSTALLER	Used for disassembling the driven shaft and transfer driven gear.
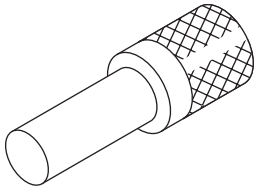 ST-899864100	899864100	REMOVER	Used for removing the transmission main shaft and drive pinion parts.
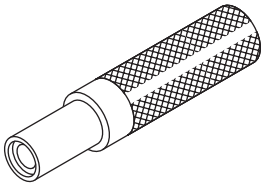 ST-899824100	899824100	PRESS	Used for installing the speedometer shaft oil seal.
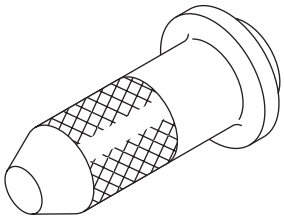 ST-498057300	498057300	INSTALLER	Used for installing the extension oil seal.

ILLUSTRATION	TOOL NUMBER	DESCRIPTION	REMARKS
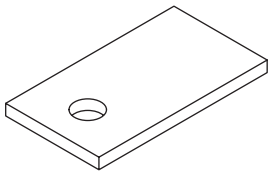 ST-498255400	498255400	PLATE	Used for measuring backlash.
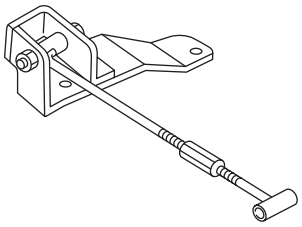 ST41099AC000	41099AC000	ENGINE SUPPORT	Used for supporting engine.
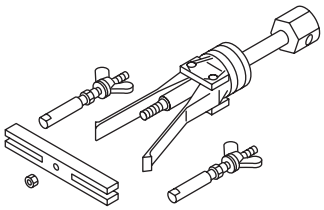 ST-398527700	398527700	PULLER ASSY	Used for removing the extension case oil seal and clutch housing oil seal.
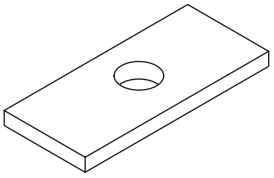 ST-499575500	499575500	GAUGE	Used for measuring the total end play, extension end play and drive pinion height.
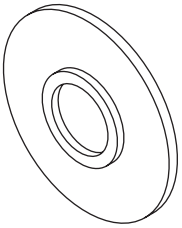 ST-398177700	398177700	INSTALLER	Used for assembling the main shaft.

ILLUSTRATION	TOOL NUMBER	DESCRIPTION	REMARKS
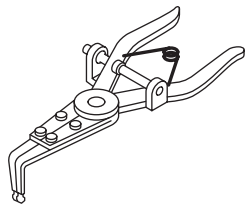 ST-399893600	399893600	PLIER	• Used for removing and installing the neutral set spring. • Used together with the CLAW (18756AA000).
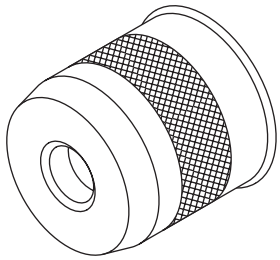 ST-499247400	499247400	INSTALLER	Used for installing the ball bearing of the transfer drive gear.
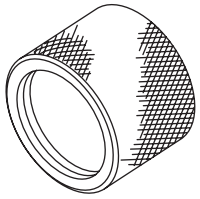 ST18675AA000	18675AA000	DIFFERENTIAL SIDE OIL SEAL INSTALLER	Used for installing the differential side retainer oil seal.
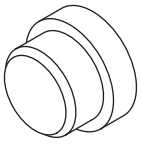 ST-398497701	398497701	SEAT	Used for installing the ball bearing of the transfer drive gear.
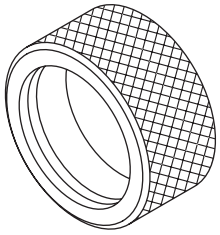 ST-398437700	398437700	INSTALLER	Used for installing the front differential side bearing.

ILLUSTRATION	TOOL NUMBER	DESCRIPTION	REMARKS
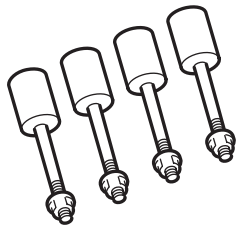 ST18632AA000	18632AA000	STAND ASSY	Used for disassembling and assembling the transmission.
ST18671AA000	18671AA000	OIL SEAL GUIDE	• Used for installing the oil seal to the reverse check. • Used together with the INSTALLER (18657AA010).
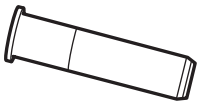 ST18657AA010	18657AA010	INSTALLER	• Used for installing the oil seal to the reverse check. • Used together with the OIL SEAL GUIDE (18671AA000).
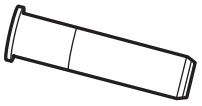 ST18657AA000	18657AA000	INSTALLER	Used for installing the oil seal to the shift rod.
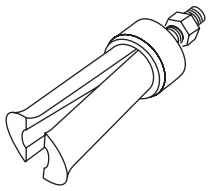 ST18758AA000	18758AA000	PULLER	Used for removing the extension taper roller bearing outer race.

ILLUSTRATION	TOOL NUMBER	DESCRIPTION	REMARKS
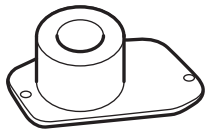 ST18831AA000	18831AA000	GAUGE	Used for measuring the extension taper roller bearing.
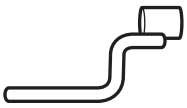 ST18631AA000	18631AA000	HANDLE	Used for measuring the front differential back-lash.
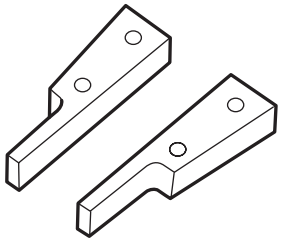 ST18756AA000	18756AA000	CLAW	• Used for removing and installing the neutral set spring. • Used together with PLIER (399893600).
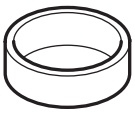 ST18754AA000	18754AA000	REMOVER	Used to remove parts of the driven gear.
ST18757AA000	18757AA000	STRAIGHT PIN REMOVER	Used for installing the reverse idler gear.

ILLUSTRATION	TOOL NUMBER	DESCRIPTION	REMARKS
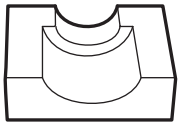 ST18665AA000	18665AA000	HOLDER	• Used for removing and installing the main shaft lock nut. • Used together with the BASE (18664AA000).
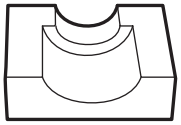 ST18666AA000	18666AA000	HOLDER	• Used for removing and installing the driven shaft lock nut. • Used together with the BASE (18664AA000).
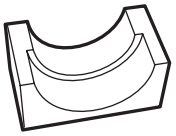 ST18667AA000	18667AA000	HOLDER	• Used for removing and installing the drive pinion shaft lock nut. • Used together with the BASE (18664AA000).
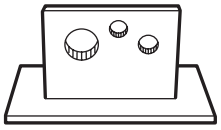 ST18664AA000	18664AA000	BASE	• Used for removing and installing the main shaft lock nut. • Used for removing and installing the drive pinion shaft lock nut. • Used for removing and installing the driven shaft lock nut.
ST18722AA010	18722AA010	REMOVER	Used for disassembling the main shaft.

ILLUSTRATION	TOOL NUMBER	DESCRIPTION	REMARKS
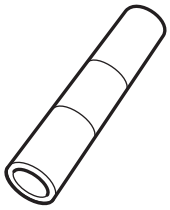 ST18651AA000	18651AA000	INSTALLER	Used for assembling the main shaft.
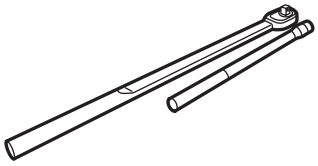 ST18852AA000	18852AA000	TORQUE WRENCH	• Used to tighten the main shaft lock nut. • Used to tighten the drive pinion shaft lock nut. • Used to tighten the driven shaft lock nut.
ST18668AA000	18668AA000	PUNCH	Used to crimp the main shaft lock nut.
ST18669AA000	18669AA000	PUNCH	Used to crimp the driven shaft lock nut.
ST18670AA000	18670AA000	PUNCH	Used to crimp the drive pinion shaft lock nut.

ILLUSTRATION	TOOL NUMBER	DESCRIPTION	REMARKS
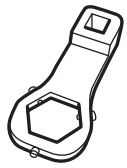 ST18620AA000	18620AA000	ADAPTER WRENCH	Used for removing and installing the driven gear shaft lock nut.
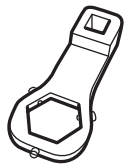 ST18621AA000	18621AA000	ADAPTER WRENCH	Used for removing and installing the drive pinion shaft lock nut.
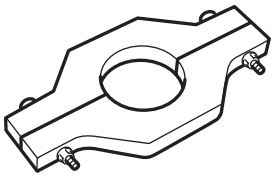 ST18723AA000	18723AA000	REMOVER	Used for disassembling the driven shaft.
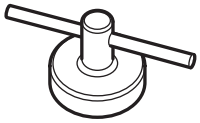 ST18630AA000	18630AA000	WRENCH ASSY	Used for removing and installing the differential side retainer LH.
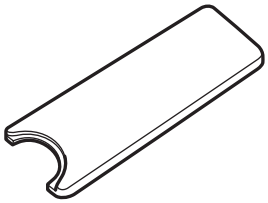 ST18672AA000	18672AA000	GUIDE CLIP	Used for installing the reverse idler snap ring.

ILLUSTRATION	TOOL NUMBER	DESCRIPTION	REMARKS
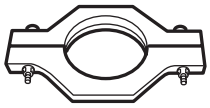 ST18720AA000	18720AA000	REMOVER	Used for disassembling the main shaft.
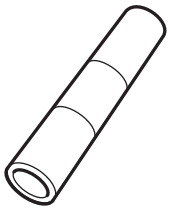 ST18654AA000	18654AA000	INSTALLER	Used for assembling the driven shaft.
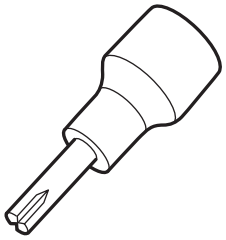 ST18663AA000	18663AA000	SOCKET	Used for removing and installing the oil pump cover.
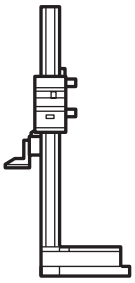 ST18853AA000	18853AA000	HEIGHT GAUGE	Used for selecting the shift rod.
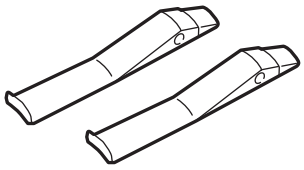 ST18760AA000	18760AA000	CLAW	• Used for removing the front side retainer bearing outer race. • Used together with PULLER ASSY (398527700).

ILLUSTRATION	TOOL NUMBER	DESCRIPTION	REMARKS
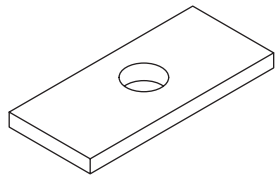 ST-398643600	398643600	GAUGE	Used for measuring the drive pinion size.
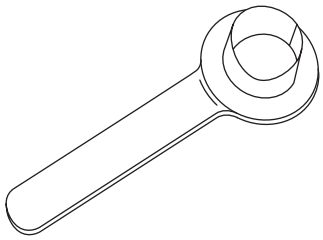 ST28399SA010	28399SA010	OIL SEAL PROTEC-TOR	Used for protecting oil seal when installing front drive shaft.
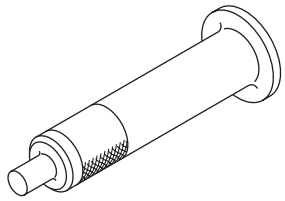 ST18657AA020	18657AA020	OIL SEAL INSTALLER	Used for installing the oil seal.

2. GENERAL TOOL

TOOL NAME	REMARKS
Circuit tester	Used for measuring resistance, voltage and current.
Crowbar	Use to pull out the drive shaft.
TORX® bit T70	Used for removing and installing transmission gear oil drain plug.